[1.]Vasile George CIOATĂ, [1.]Vasile ALEXA, [2.]Bogdan Dorel CIOROAGĂ

PARAMETRIC DESIGN OF LINEAR HYDRAULIC MOTORS

[1.]University Politehnica Timişoara, Faculty of Engineering Hunedoara, Hunedoara, ROMANIA
[2.]ASSA ABLOY Entrance Systems Production Romania S.R.L, Hunedoara, ROMANIA

Abstract: This paper deals with issues regarding the possibility of automation of 3D models used in design processes. The examples of methods and tools used in the computer-aided design process are highlighted using the 3D model of a double-acting. The purpose of the paper is to present a possibility worth considering for the optimization of time required for design processes. The paper presents both theoretical aspects and results from the practice of building the 3D model needed to describe the methods and tools through which the design process was done.
Keywords: parameters, configuration, 3D model, design, automation

INTRODUCTION

Due to the increasingly fast rhythm of technology evolution, industry and design departments are forced to reduce the time required to manage current day-to-day problems to make room for new market requirements. Modern computer-aided design methods open new horizons in the sense of optimizing the work done for product development and design [1,2,6,7].

The paper highlights the possibility of automating the 3D model of an assembly representing a linear hydraulic motor with double action. This automation consists of a different approach, in terms of the design process, compared to the design made through clearly defined 3D models.

To achieve this automation will need a set of algorithms, constraints, input data and limitations of this data set as operating limits for generating new configurations of our product.

The concept of configuration will be a very common one in the paper, due to the fact that by automating the virtual model of the product it will be defined through the configuration resulting from the processing of input data.

Finally, this whole design process driven automatically has the role of optimizing design times and simulating different product configurations, in order to choose an optimal configuration.

THEORETICAL ASPECTS REGARDING THE AUTOMATION OF 3D MODEL DESIGN

In order for the design activity to take place, it is necessary to have a design theme, which provides us with the main input data that outlines the product. Based on these input data, a standard product configuration is established, which serves as a reference base for the allocation in the areas where it is necessary within the 3D model of the main parameters, which will subsequently generate new product configurations.

These parameters are generated by a configurator that processes the input data taken from the design theme, through algorithms that can contain both logical and mathematical functions.

Keeping records of parameters is recommended to be done through coding systems that give them the possibility to be easily identified and to have a unique character.

The main characteristics of the parameters are:

- name or code;
- the value it indicates
- unit of measurement

Configurators are the ones who manage the situation of the parameters, they can be incorporated into the 3D model or they can be external files. The structure of these configurators varies depending on the needs or limitations imposed by certain programs in which they run or interact with. The general structure of such a configurator tool is:

- user interface, the place where the input data is entered;
- the data processor, where the data processing takes place;
- the exported database, where the parameters intended for export to the 3D model are located.

The 3D model of the product is usually a final assembly that consists of components such as parts and subassemblies. These parts are connected to each other by through of assembly constraints. The pieces are always modeled starting from the sketching environment, after which the development of 3D geometric shapes takes place using specific commands (extrude, revolver, sweep, loft, etc.) and, subsequently, editing using tools provided by the software used.

Considering all this, we can list a series of steps necessary to build an automatic 3D model:

- Step 1 – Define the product by creating the standard 3D model;
- Step 2 – Identify the configuration range;
- Step 3 – Establishing the areas that will be defined by the variable parameters;

≡ Step 4 – Establishing the algorithms necessary to obtain the values of the variable parameters;
≡ Step 5 – Defining the configurator structure, creating it;
≡ Step 6 – Import the parameters into the 3D model;
≡ Step 7 – Linking the parameters in the preset areas;
≡ Step 8 – Test the 3D model.

The structure of the 3D model must be flexible in terms of adaptation to new configurations, areas must be foreseen where geometric interference or open loops may occur (in particular, such problems occur in the sketching environment). Problems can occur in the assembly environment in the area of geometric constraints, due to the disappearance of some references due to the transition from one configuration to another. To avoid these situations, it is recommended to avoid complicated geometries and to adopt technical solutions that require as few areas as possible defined by variable parameters.

A problem very common seen in practice, during the definition of algorithms for calculating variable parameters, due to the large number of parameters that are dependent on each other may occur, at some point, blockages in defining the functions required for the next parameters. This problem is caused by trying to define a parameter based on another parameter that can include the first on in its algorithm.

Coding the specific parts of a certain product configuration can often be difficult due to the fact that the part can have a large number of variable parameters, a large number being considered over two parameters. If all those components are used only in the current configuration, the problem is simplified by the fact that they may contain in the part number an area assigned to identify the configuration to which it belongs.

In case the respective parts can be found and configured to result other products, the problem of coding the configuration of the respective part appears, which must consider all possible configuration variants – if they are known – or have an algorithm for generating an extension of the base code called a variant, taking into consideration the variation of the parameters that shape the configuration of the component. The most difficult part is to describe the value of parameters of a certain number of digits in a space reserved within the variant that has a predefined and limited number of characters, which in most cases is insufficient when the component has more than two such parameters.

3D MODEL OF A DOUBLE ACTION LINEAR HYDRAULIC ENGINE

In the case of linear hydraulic motors, the input data taken from the design themes are generally the same for most of those constructive-functional types of these products. This generality is due to the fact that linear hydraulic motors, regardless of their constructive structure or their functionality, always have in common both the same functional parameters (developed force, pressure, flow, stroke, piston travel speed) and most parts that compose them (rods, piston, gaskets, caps).

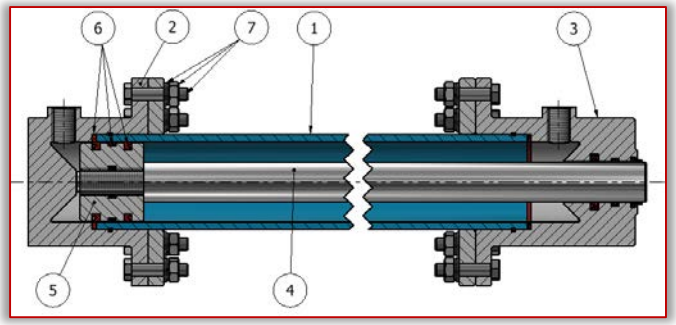

Figure 1 - Longitudinal section by standard 3D model - linear hydraulic motor with double action

The common elements mentioned before of this type of product facilitate and at the same time justify the application of a design method using automated 3D models.

The constructive solution of the standard 3D model is shown in figure 1, where it can be seen that the hydraulic motor is composed of a cylindrical tube (1) which at both ends is sealed by two caps, one clogged (2) and one pierced (3) to facilitate the passage of the rod (4), which is driven by the piston (5) flowing through the cylindrical tube. The sealing of this system is performed with the help of sealing elements (6) which are marked with red color in the section from the image. With (7) we noted the assembly elements of screw, washer and nuts.

The input data, made up of the functional parameters for the automation of the 3D model for the presented example, are:

≡ the stroke;
≡ nominal pressure;
≡ nominal pushing force;
≡ nominal flow;
≡ rod / inner diameter ratio.

The configuration limits considered for the design of the different configurations of the 3D model through which the linear hydraulic motor with double action is represented are:

≡ Piston stroke, between 300 - 2000 mm;
≡ Nominal operating pressure, between 50 - 500 bar;
≡ Nominal pushing force, between 9.8 - 883 kN;
≡ Nominal flow supplied by the pump, between 2.5 - 215 l / min;
≡ Piston diameter, between 50 -150 mm.

Due to the fact that the rods and covers can be of several types of dimensions, the configuration process and the possibility of choosing them will be taken into

consideration, being available the following possibilities to enter configuration data in this respect:

≡ rod type (TT): smooth cylindrical, threaded cylindrical, fork, eye bolt;

≡ support type (TR): simple cylindrical, cylindrical with flanges, eye bolt.

Regarding the type of rod, this in turn has the possibility to configure the geometric characteristics of the end area where the interaction of the linear hydraulic motor with other external systems takes place.

The configurator is created in an Excel file, consisting of 3 spreadsheets with distinct functions. The first spreadsheet is the register of parameters intended for export, the second spreadsheet functions as an interface for entering configuration data, and the third spreadsheet has the basic role of processing input data.

Figure 2 shows the structure of the interface page, which shows the configuration data entry fields on the left, and on the right side of the interface is a table with configuration limits that shows the minimum and maximum accepted for configuration for each field.

Configurator

Input data				
	Stroke	400	mm	
	Nominal pressure (P)	500	bar	
	Nominal pushing force (F)	880	kN	
	Nominal flow (Q)	50	l/min	
	Inner diameter rod ratio	1/2	ul	
	Rod extension (ET)	20	mm	
	Rod type (TT)	Cilindric neted	-	
	Threaded rod length (LF)	30	mm	Validated
	Metric threaded rods (MTF)	40	mm	Validated
	Fork hole (GF)	32	mm	Validated
	Opening fork (DF)	35	mm	Validated
	Rod eye diameter (OT)	30	mm	Validated
	Support type (TR)	Simple cylindrical	-	
	General model	Da	-	

Configuration limits					
Stroke	maximum	2000	mm	Validated
	minimum	300		
Nominal pressure (P)	maximum	500	bar	Validated
	minimum	50		
Nominal pushing force (F)	maximum	883	kN	Validated
	minimum	9.8		
Nominal flow (Q)	maximum	215	l/min	Validated
	minimum	2.5		
Rod extension (ET)	maximum	80	mm	Validated
	minimum	0		
Piston diameter (Dic)	maxim	150	mm	Validated
	minimum	50		
	Actual	150		

Figure 2 - Configuration interface, 3D model configurator

Next to each data entry field is placed a warning cell regarding the framing of the data entered within the preset limits. If the data entered is within the preset limits, the message "Validated" is displayed in the cell, when all these fields have this message, it means that the chosen configuration is possible and no problems will occur in the 3D model.

It can be seen that the last field in the configuration interface is called "General Model" it has two configuration possibilities:

≡ "Yes" - If you want to generate the standard 3D model;

≡ "No" - If you want to obtain the configuration generated by entering the configuration data from this interface.

Figure 3 shows a collage with possible product configurations, obtained from the export of the parameters processed by the excel configuration file.

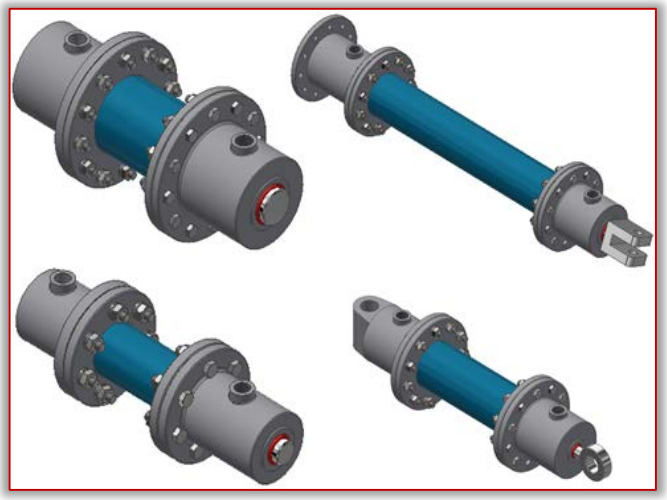

Figure 3 – Adaptations of the automatic 3D model to different configurations

If we analyze figure 3 it can be seen that the differences that appear between the configurations presented are not only dimensional in nature, there are substitutions of certain parts such as the clogged cover that is used as a fixed or articulated support and the rod that can be of 4 types. These replacement parts are possible with the "iLogic" feature implemented in the Autodesk Inventor software in which the 3D model was built.

Through the iLogic function, the 3D model can be programmed in order to obtain part substitutions by assigning values to certain parameters that have a command role in this regard. An example of programming to control a part replacement is shown in Figure 4.

The parameter under the code name Z1_F1_F_003 can take values from 1 to 3 depending on the settings set in the configurator for choosing the type of support.

From the represented code it can be seen that while the control parameter has the value 1 the 3D model

will display the part 0002-0001: 1 from the assembly environment of the 3D model and the other parts will be suppressed.

```
If Z1_F1_F_003=1 Then
Component.IsActive("0002-0001:1")=True
Component.IsActive("0002-0002:1")=False
Component.IsActive("0002-0003:1")=False
End If
If Z1_F1_F_003=2 Then
Component.IsActive("0002-0001:1")=False
Component.IsActive("0002-0002:1")=True
Component.IsActive("0002-0003:1")=False
End If
If Z1_F1_F_003=3 Then
Component.IsActive("0002-0001:1")=False
Component.IsActive("0002-0002:1")=False
Component.IsActive("0002-0003:1")=True
End If
```

Figure 4 – Example of programming

It is important to note that all these parts must be constrained by a part that cannot be replaced to avoid that the dimensional constraints in the assembly medium lose their references to the possible substitution of the part considered the basis of the constraint.

CONCLUSION

It can be concluded that this design method is successfully applicable for products whose configuration ranges are known and within some limits of the input data from the design theme. The main advantage of this method is that a 3D model of the product can be generated in a short time, which is often required especially in offers made to customers as a preliminary project. All this without generating other design costs. The method is easy to use even for a non-specialist after the launching in use the 3D model by specialized personnel, due to the fact that it is based on entering input data into a form-type structure.

This method it can be in the future a starting point for the introduction of artificial intelligence in mechanical design departments, replacing the current designer with a simple form for entering data by the beneficiary.

References

[1] Cioată, V. G., Miklos, I. Z, Proiectare asistată de calculator cu Autodesk Inventor, Ed. Mirton, Timişoara, 2009

[2] Cioroagă B. D., Proiectarea prin intermediul modelelor 3D configurabile, Simpozion Ştiinţific Studenţesc HD-50-STUD, 15-16 mai, Facultatea de Inginerie Hunedoara, Romania, 2020

[3] Stăncescu C., Proiectare parametrică şi adaptivă cu Inventor, Ed. Fast, Bucureşti, 2014

[4] Tickoo, Sham, s.a., Autodesk Inventor 2008 for Designers, CADCIM Technologies, 2008

[5] Saxena, A., s.a., Computer Aided Engineering Design, Springer, 2005

[6] Cioată, V. G., Computer aided design of clamping mechanisms with articulated arms, ANNALS of F.E.H. - International Journal of Engineering, 2007, 5(3), 157-161

[7] Cioată, V. G., Kiss, I., Dynamic analysis and parametric optimisation of the connecting rod using Autodesk Inventor, Machine Design, 2017, 9(1), 29-34

[8] http://www.autodesk.com

ACTA TECHNICA CORVINIENSIS – Bulletin of Engineering
ISSN: 2067-3809
copyright © University POLITEHNICA Timisoara,
Faculty of Engineering Hunedoara,
5, Revolutiei, 331128, Hunedoara, ROMANIA
http://acta.fih.upt.ro